Rasonic 樂信牌

香港客戶服務中心
香港新界葵涌勝耀街2號信興中心1樓
電話：（852）2406 5439　　傳真：（852）2408 1389

Hong Kong Customer Service Centres：
1st Floor, Shun Hing Centre, 2 Shing Yiu Street, Kwai Chung, N.T., H.K
Tel：（852）2406 5439　　Fax：（852）2408 1389

澳門客戶服務中心
澳門慕拉士大馬路193~199號南嶺工業大廈5樓I座
電話：（853）2836 2928　　傳真：（853）2833 6405

Macau Customer Service Centres：
Avenida de Venceslau de Morais, No. 193~199, 5 andar - I, Edf.
Industrial Nam Leng, Macau
Tel：（853）2836 2928　　Fax：（853）2833 6405

有關最新之客戶服務中心資訊，請參閱信興服務中心網址：
www.shesc.com或致電維修服務熱線查詢
For the latest information of customer service centres, please visit
www.shesc.com or call us at our hotline.

Rasonic 樂信牌

信興電工工程有限公司
SHUN HING ELECTRIC WORKS AND ENGINEERING CO., LTD.
辦公室：香港九龍尖沙咀東部麼地道67號半島中心9樓909–912室
電話：（852）2861 2767　　圖文傳真：（852）2865 6706
網址： www.rasonic.com　　電郵： shew@shunhinggroup.com

Office：Room 909-912, 9/F, Peninsula Centre, 67 Mody Road, Tsim Sha Tsui East, Kln., H.K.
Tel：（852）2861 2767　　Fax：（852）2865 6706
Website： www.rasonic.com　　Email：shew@shunhinggroup.com

保養及維修Maintenance and Repair Service：

信興電器服務中心有限公司
SHUN HING ELECTRIC SERVICE CENTRE LTD.
香港新界葵涌勝耀街2號信興中心11樓
電話：（852）2406 5666　　圖文傳真：（852）2408 0316
網址： www.shesc.com

Office：11th Floor, Shun Hing Centre, 2 Shing Yiu Stree, Kwai Chung, N.T., H.K.
Tel：（852）2406 5666　　Fax：（852）2408 0316
Website： www.shesc.com

消耗品/附件銷售熱線：(852) 2406 5666
Consumables/Accessories Sales Hotline：(852) 2406 5666

RRH/G/2103

SHUN HING GROUP
信興集團
SINCE 1953

Rasonic
樂信牌

RRH-GT50

煙囪式抽油煙機
Chimney Range Hood

僅適用於家庭使用
For household use only

使用說明書
OPERATION MANUAL

- 在使用本產品前，請仔細閱讀本說明書，並妥善保存本說明書以備用戶日後查詢。
  Please read the operation manual carefully before using and well keep it in a safe place for future reference.
- 本說明書中的圖示可能有與實物不同的地方，僅供參考。
  Some figures in this manual may not match with the real object, just for reference only.

6. Product Circuit Diagram RRH-GT50

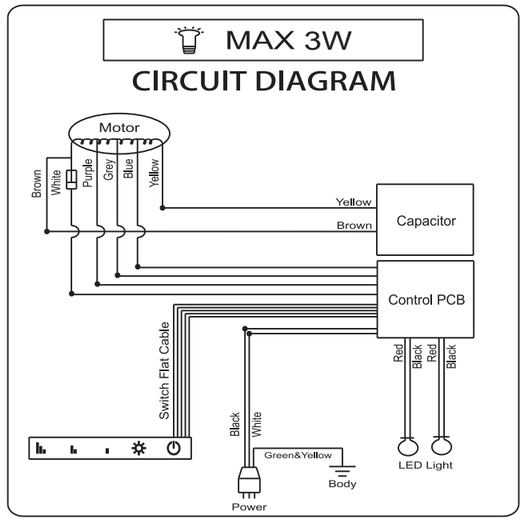

7. Remarks

1. This information above has been checked; our company reserves the hermeneutic power to any print errors or misunderstanding on the content.
2. Please note that any technology improvement will be added to the new versions of operation manual without any prior notices. The product appearances color and specifications are subject to the actual appliance.
3. An electronic copy of the user manual can be emailed to the customer. If necessary, please call Shun Hing Electric Works & Engineering Co., Ltd.: 28612767.

8. After Sales Service

1. For any defect, in the judgment of technician from Shun Hing Electric Service Centre Limited, caused under normal use, we are responsible for repairing or replacing parts of the said electrical appliance free of charge within one year guarantee period commencing from the date of purchase. Any defective part which has been replaced shall become our property. Guarantee service does not cover the repair or replacement of accessories, external cables or cabinet, etc. Additional charges shall be levied if services are required.
2. Please present the official invoice and the guarantee certificate with the sales point's chop or the redemption center's chop for free maintenance. For enquiries, please call Shun Hing Electric Service Centre Limited hotline at 2406 5666.
3. Free guarantee service will not be provided to the unit if: 1) it has been explicitly or implicitly modified, tampered with, altered or repaired in any way by persons other than technicians of the Company. Or 2) it has been damaged through misuse, negligence, liquid ingress or corrosion, power interruption, natural calamities or accident or external factors. Or 3) it is not a fixed installation on land. Or 4) the normal operation of the unit is affected by improper installation. Or 5) the domestic model of unit is used for industrial or commercial purpose. Or 6) the change of location or ownership of the unit and did not inform Shun Hing Electric Service Centre Limited.

非常感謝您選購樂信牌抽油煙機，為了使我們的產品能全心全意地為您服務，在使用前請先詳細閱讀本說明書，並保存以備日後參考。

注意事項：

抽油煙機最低部位與爐灶頂部垂直計算必須有65–70厘米的距離。左右必須保持水平，否則集油杯內的積油可能傾向單邊並溢出機體外。

目錄

1. 安全注意事項

2. 產品結構及規格

3. 產品安裝

4. 產品操作/保養/清潔方法

5. 故障排除

6. 產品電路圖

7. 備註

1. 安全注意事項

使用本產品時，必須遵守下列安全預防措施。

不遵循或忽視這些安全注意事項會導致火災、觸電或個人傷害。

1.1 適合環境

1. 本產品只可作家庭使用(一般室內或類似室內環境)，切勿在室外使用或用作說明書建議以外的其他用途。如不當使用本產品，或作(半)商業用途，或未依照使用手冊操作，維修保養將無效，本公司將不會承擔任何損壞的維修及賠償。

1.2 注意事項

1. 請先放好煮食用具才啓動煮食爐具，切勿讓爐火直接烘烤抽油煙機。
2. 當氣體爐具或其它燃具與抽油煙機同時使用時，室內需要保持充足的空氣流通。
3. 切勿在鍋具中燃火，如將烹調好的食品澆上酒精類等易燃的佐料，以免燒壞機體或引致其他危險。
4. 在食油著火時立刻停止使用並關掉抽油煙機。
5. 如果產品出現損壞或受到外來的猛然撞擊，應立即停止使用，關掉產品電源及拔出電源插頭或關掉固定線路上的獨立開關掣，以避免造成電擊、短路或火災等危險。並請立即聯絡信興電器服務中心有限公司進行檢查及維修。
6. 請嚴格按照說明書所建議的方法使用及清洗抽油煙機，以免發生危險。
7. 清潔前必須截斷電源並拔掉電源線插頭。
8. 當拆下濾網及集油杯前，請關上電源。
9. 注意:當煮食時，機體可能變熱，請勿觸摸。
10. 切勿噴灑水和清潔劑到摩打和控制面板上。
11. 當更換照明燈時，必須先將電源插頭拔掉，並等待燈泡冷卻後再更換（約20分鐘），以免燙傷。
12. 切勿使用汽油、苯、溶劑或類似化學藥物清洗抽油煙機。
13. 切勿讓不習慣操作本產品的人獨自使用本產品。
14. 本產品並不是為體質、感覺或智力有障礙人士或缺乏經驗(包括小孩)或相關知識的人士使用，除非他們曾經接受負責安全人士的監督或指示。
15. 若有孩童在旁，須加倍小心使用產品及看管小孩，以確保他們不會把此產品當作玩具。切勿讓小孩單獨使用，切勿將本產品放於小孩能觸及的地方。

5. Troubleshooting and Treatment

During operations, if any problems occurred, please check the following table before repairing.

Situation	Check
Range hood does not operate.	- Is power switch on at the panel? - Is the electricity on suspension? - Is the plug connected firmly?
Weak suction power	- Is the distance between the cooking surface and range hood larger than the specified value? - Are there many opened windows and doors in the surroundings? - Is the exhaust air pipe too long/ too many turns? - Is there a strong wind in the outside environment?
Range hood is noisier than usual or vibrating.	- Is the filter fixed properly? - Is the filter contaminated by grease?

If the above problem cannot be fixed still, turn off the main power or the switch, and contact Shun Hing Electric Service Centre Ltd. (Tel: 2406-5666), and be reminded that the official invoice and guarantee certificate must be presented for checking and repairing service. To avoid any danger and damage to the appliance, do not disassemble or repair by yourself.

4. Operation of Range Hood / Maintenance and Cleaning Methods

4.1 Operation:

Start the range hood by touching the icon in the panel.

Icon Instruction:

Touch Screen Functional Icon Instruction				
Speed TURBO	Speed HIGH	Speed LOW	Light	Power ON/OFF

Speed TURBO:
under Speed TURBO, the motor will operate in ultimate speed and can increase suction instantly.

Delay shutdown operation:
This function can remove the remaining fumes from the kitchen. Push the Power On/Off Button when the exhaust fan is operating, the machine starts delay shutdown operation and keeps operating for 180 seconds. Meanwhile, the LED signal of Power On / Off flashes to remind the users, and the machine will automatically shut down after 180 seconds. If the users want to forcibly stopped the delay shutdown operation, users can just press Power On / Off button again.

4.2 Oil cup disassemble:

Please make sure the power is turned off before disassemble filters and oil cup.

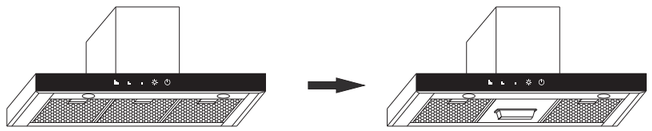

4.3 LED Bulb: If there is malfunction of the bulb, please contact Shun Hing Electric Service Centre Ltd.

4.4 Filter assembly and cleaning:
(recommended to clean the filter once after one to three days)

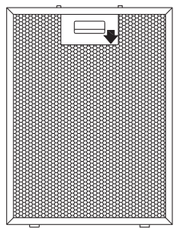

a. Disconnect the main supply and unplug before cleaning.
b. Move the latch of the filter backward can disassemble it.
For reassemble, put the filter backward with matching the holes in the suction compartment.
c. Cleaning:
(1)Soak the filter in hot water and use soft cloth to wipe, then dry it with dry cloth.
(2)When the filter is oily and difficult to clean, place the filter in a boiling water for one minute.
(3)To clean the filter under water after use can keep the efficiency of the suction power.
(4)Suggest to replace a new filter according to the usage.

⚠ NOTICE

A. Keeping the filter clean can maintain the efficiency of the suction power.
B. Clean the filter to avoid too much oil, which may drop when heating.
C. Use wet cloth with mild and neutral detergent to clean the range hood after cooking.
D. Do not flame under the range hood. When frying, take particular care to prevent oil and grease or other flammable seasonings from catching fire and damage the machine.

16. 在有人監督以及以安全的方法根據設備使用相關使用說明之指示下，此設備可由8歲以上的兒童使用，也可由8歲以上但體質、感覺或心智能力不足或是缺乏經驗與知識人士使用，但他們須了解相關的風險。兒童不應擅自把玩設備。不應由兒童獨自進行清潔與進行保養。
17. 切勿讓嬰兒靠近。
18 切勿將任何物件(如針或金屬線)插入濾網。
19. 切勿手濕操作產品、插入或拔除插頭。
20. 切勿將電源線懸掛在桌子、櫥櫃的邊緣或令它接觸發熱的表面。切勿在電源線纏結的情況下使用本產品，否則會加快電源線的損耗。
21. 切勿拆卸、試圖維修或改裝本產品。若要維修，請與信興電器服務中心有限公司聯絡。
22. 如果附帶的電線有破損，必須聯絡信興電器服務中心有限公司更換，以免發生危險。
23. 切勿將本產品用於抽吸油煙以外的其他用途。(如果本產品用於抽吸油煙之外的用途，則可能會發生故障及危險。)
24. 當產品機身或零件出現故障，或不能正常操作，切勿自行使用或更換其他非生產商授權的零件或配件，以免發生危險。(否則維修保養無效)
25. 遵從安全守則及避免釀成意外，如需檢查或維修產品，請聯絡信興電器服務中心有限公司(地址印於本使用說明書的背頁或致電2406-5666)，並確保在檢查或維修時可出示有效的保修證及收據。

2. 產品結構及規格

2.1 產品結構

註：各抽油煙機的結構大致相同，以下圖片僅供參考。

RRH-GT50

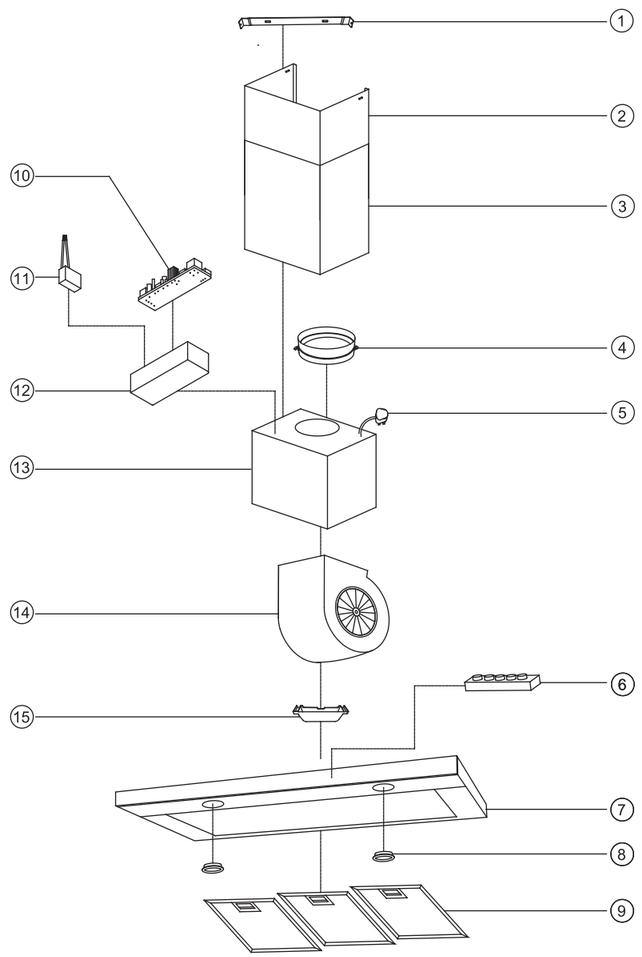

① 歐式吊板
② 鋁管飾板(內襯)
③ 鋁管飾板(外包)
④ 出風口座
⑤ 電源線
⑥ 觸控電子開關
⑦ 機箱
⑧ LED崁燈
⑨ 濾網
⑩ 電源控制組
⑪ 電容器
⑫ 電器盒
⑬ 馬達機箱
⑭ 排風扇
⑮ 集油杯

Rasonic 樂信牌

3.3 Installation Procedures Diagram

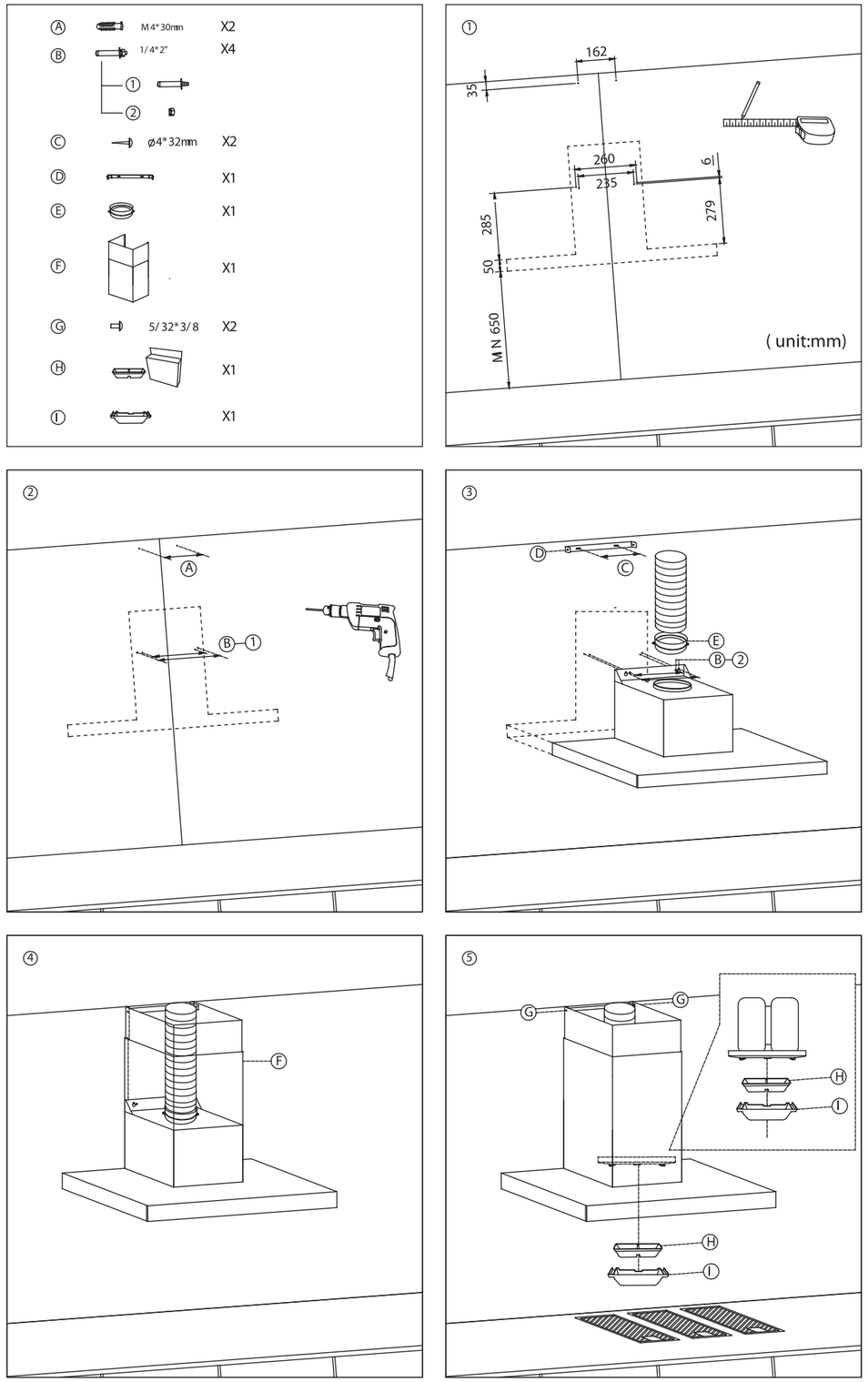

Chimney Range Hood 歐式抽油煙機

3.2 Installation Procedures

Warning:

Failure to install the screws or fixing device in accordance with these instructions may result in electrical hazards.

1. Unpack the carton box and check if all accessories are ready (stated in P. 17). Study the installation procedures diagram, which is for reference only.
2. Before installation, check every functions of switching are in well condition (such as motor, illumination). Do not touch the fan inside the hood to prevent any injury or damage to the fan.
3. Drill 1/4"(ϕ 6mm) holes in designated position of clement wall, stuff the expansion anchor bolts (1/4 x 2") into the drilled hole. Hang the hood and tight the screws, make sure the screw drive into the wall firmly. Do not install in calcium silicate board or decorative wooden board.
4. For replacing hood, make sure the original screws are dismantled and replaced with new screws to avoid rusty of screw and lead to damage.
5. After machine is equipped, always keeps machine body in horizontal status.
6. Installation of exhaust pipe:

   Insert one side of exhaust pipe to the adapter fitted on the top vent of machine. Then, another side of pipe is fitted to go through exhaust hole.

Note and Importance: All the installation has to be done by a qualified person in accordance with instructions mentioned in this manual. If you have any queries, please contact your selling agent.

2.2 附屬零件表

註：以下零件外觀只作參考示意用，並非按照比例製作。

項目	名稱	簡圖	數量	描述
1	出風口座（風管圈）(6"出5.5")		1	裝於出風口
2	鋁管飾板（內襯）	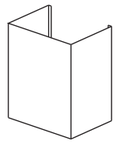	1	裝於鋁風管外圍
3	鋁管飾板（外包）	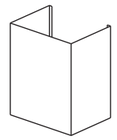	1	裝於鋁風管外圍
4	歐式吊板		1	固定於牆上，安裝鋁管飾板用
5	集油杯		1	裝於風機組下方
6	拋棄式免洗油杯（彩盒包裝20入）	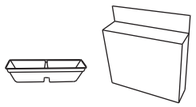	1	裝於集油杯內
7	自攻螺絲（ϕ4*32mm）		2	供歐式吊板安裝用
8	機械螺絲（5/32*3/8）		2	供鋁管飾板安裝用
9	膨脹膠栓（M4*30mm）		2	供歐式吊板安裝用
10	膨脹金屬栓（1/4*2"）		4	供歐式油機安裝用

歐式抽油煙機 | Chimney Range Hood

2.3 產品規格

型號	RRH-GT50
額定電壓	220-240伏特(V)~ 50赫茲(Hz)
額定功率	335瓦(W)
照明	3瓦(W)LED燈膽X2
機體尺寸(闊深高)	896*370*50毫米(mm)
包裝尺寸(闊深高)	1050*575*525毫米(mm)
淨重	12公斤(kg)
毛重	19公斤(kg)

規格如有任何更改，恕不另行通知。

2.4 產品尺寸圖

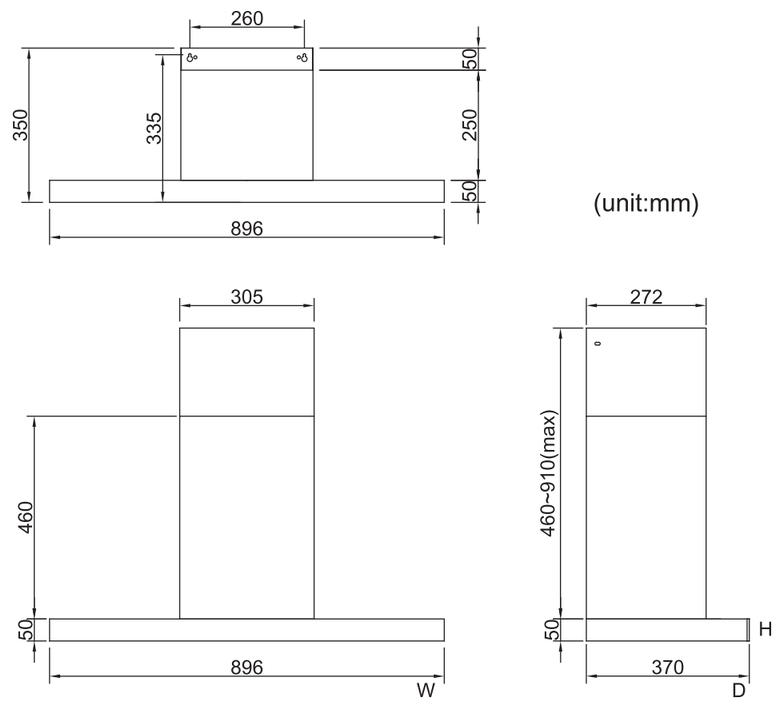

3. Installation of Range Hood

3.1 Safety Precautions

Warning:

Failure to install the screws or fixing device in accordance with these instructions may result in electrical hazards.

1. Please read this operation manual carefully before installation and using, during installation, power supply must be disconnected. Be sure to do a trial run and make sure to have well understanding to the usage of the appliance.
2. Do not install the range hood in the bathroom or in other wet rooms which may cause electrical shock and damage.
3. The installation should be carried out by a qualified technician.
4. Exhaust air must not be discharged into a flue which is used for exhausting fumes from appliances burning gas or other fuels.
5. Be sure to provide an appropriate ventilating opening. To reduce the risk of fire and to exhaust air properly, be sure to duct air outside. Do not vent exhaust air into spaces within walls, ceilings or into attics, crawl spaces or garages.
6. Check the voltage on the rating label which should match local code (220-240V~ / 50Hz).
7. Before installation, plug in and check if the motors and lamp are functional. Do not touch the vane or insert objects inside the hood to prevent any injury or damage to the hood.
8. This appliance must install earth wiring. Installation must be carried out only when power supply is disconnected.
9. Do not connect the earth wire to water pipe, flammable gas pipes or telephone cable to avoid any hazard.
10. The installation of height is measured vertically from the bottom of hood to the top of stove, the recommended height is 65-70 cm. The hood shall be kept in horizontal position to prevent grease from pouring out of oil container.
11. To increase the efficiency of hood, it is recommended to use 5.5” exhaust duct. The length of exhaust duct should be minimized (ideal length of 1-1.8m) and no more than two turns. The outside end of exhaust duct must face downward to avoid rain and air backflow form outside and damage the appliance.
12. Too many windows and doors surrounding the appliance will cause poor air convection, worsening the efficiency of air-exhaustion.
13. Secure and fasten the appliance and parts properly, incorrect attachment may result in personal injury or property damage.

煙囪式抽油煙機 | Chimney Range Hood

2.3 Product Specification

Model	RRH-GT50
Rated Voltage	220-240(V)~ 50(Hz)
Rated Power	335(W)
Illumination	LED Light (3W) x2
Machine Dimension (W*D*H)	896*370*50(mm)
Packing Dimension (W*D*H)	1050*575*525(mm)
Net Weight	12(kg)
Gross Weight	19(kg)

Specification may change without prior notice.

2.4 Product Dimension

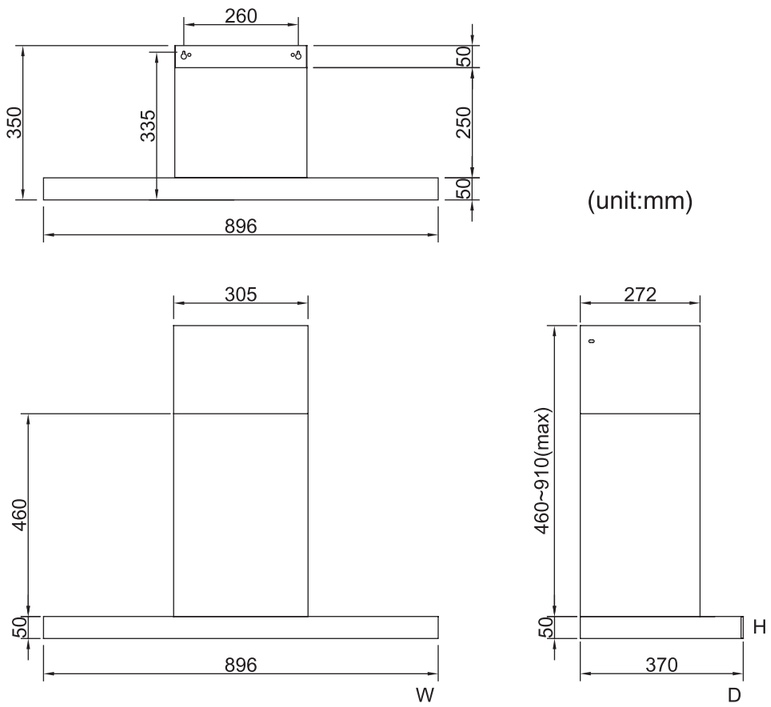

3. 產品安裝

3.1 安裝注意事項

警告：不按照以下說明安裝螺釘或固定裝置可能會導致電氣危險。

1. 安裝前須詳細閱讀說明書，並按照要求進行安裝，確認安裝無誤後，才可接通電源。請務必進行試運行，並了解正確的使用方法。
2. 嚴禁安裝在浴室或其他潮濕房間，否則可能會引起電擊或損害。
3. 抽油煙機必須由合資格的專業工程人員進行安裝。
4. 廢氣絕不可以排放到一般用於氣體爐具或其它燃具的排氣管道中。
5. 必須提供合適的通風口接通戶外。為減少火災危險及有效通風，務必將氣體排到戶外。切勿排入空心牆壁或天花板夾層或屋頂夾層、小房間、汽車庫等空間。
6. 安裝前先檢查抽油煙機的銘牌，並請確保額定的電壓與所使用的電壓相符（220-240伏特(V)~/50赫茲(Hz)）。
7. 安裝前先接上電源，測試操作各項功能的開關是否正常(如摩打、照明等)，切勿伸手或將其他物件插入抽油煙機內部以避免觸及風輪而產生危險或損壞機件。
8. 電源插座必須安裝接地線，安裝時務必關掉電源。
9. 請勿將接地線接於水管，易燃氣管或電話線等，以避免危險。
10. 抽油煙機最低部位與爐灶頂部垂直計算必須有65-70厘米的距離。左右必須保持水平，否則集油杯內的積油可能傾向單邊並溢出機體外。
11. 為確保排氣效率，建議使用5.5吋的排氣喉管。排氣喉應平直排列及避免過長（以1至1.8米的長度為佳），如不能平直排列，轉彎角的彎度亦應該盡大及不多於兩個彎位。室外排氣喉口必須向下垂直排風，以防雨水及風倒流破壞抽油煙機。
12. 抽油煙機安裝之周圍，應避免過多門窗而產生太大的空氣對流，導致抽油煙機無法發揮其排煙效果。
13. 抽油煙機及各部件必須安裝牢固，否則可能引起危險或災害。

3.2 安裝程序

警告：不按照以下說明安裝螺釘或固定裝置可能會導致電氣危險。

1.打開紙箱檢視保證書、說明書、風管座 ..... 等附屬配件(列於第5頁)是否齊全。

參考第9頁的安裝程序圖。

安裝說明關於抽油煙機的圖示，僅作示意參考用。

2.安裝前先接上電源操作開關測試各項功能是否正常（馬達運轉 、照明）。

3.在已選定的水泥牆面安裝位置上，以 1/4 " （φ6mm)鑽頭鑽孔，將膨膠金屬栓（1/4 X 2"）的螺帽轉出，並將膨脹金屬栓塞入孔內，並配合後板鑰匙孔之孔位鎖上螺帽，切勿直接安裝於矽酸鈣板或其他未有木角條補強之裝潢木板上。

4.若為舊機換新機，務必將牆上原有吊掛抽油煙機之舊螺絲釘換新，以防止螺絲釘鏽蝕斷裂造成危險。

5.懸掛後，機體要保持一定水平。

6.裝設排氣管：

將排氣管一端套入出風管座，並將出風管座另一端固定於機體出風口及排氣管另一端固定於排氣孔上。

註：有關排氣管之裝設，以上說明僅供參考，施工需聘請專業人員處理或咨詢代理商。

2.2 Accessory Part List

Remark: The parts are subject to actual parts appearance and not in scales, below sketches are for reference only.

Item	Title	Sketch	Quantity (pcs)	Description
1	Tube Joint (6" to 5.5")		1	Mount in the air outlet
2	Upper Chimney Cover	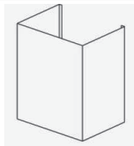	1	Mount outside the duct
3	Lower Chimney Cover	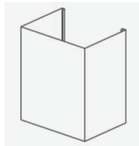	1	Mount outside the duct
4	Chimney Mounting Bracket		1	Fixed to the wall and Use in upper/lower chimney cover Installation
5	Oil Cup		1	Mount on the bottom of the exhaust fan
6	Disposable Oil Cup (20pcs in color box)	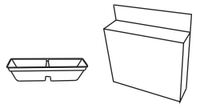	1	Use in the oil cup
7	Self Tapping Screw (φ4*32mm)		2	Use in chimney mounting bracket installation
8	Machine Screw (5/32*3/8)		2	Use in upper/lower chimney cover installation
9	Plastic Anchor (M4*30mm)		2	Use in chimney mounting bracket installation
10	Expansion Anchor Bolts (1/4*2")		4	use in range hoods installation

2. Product Configuration and Specification

2.1 Product Configuration

The illustration are for reference only.

RRH-GT50

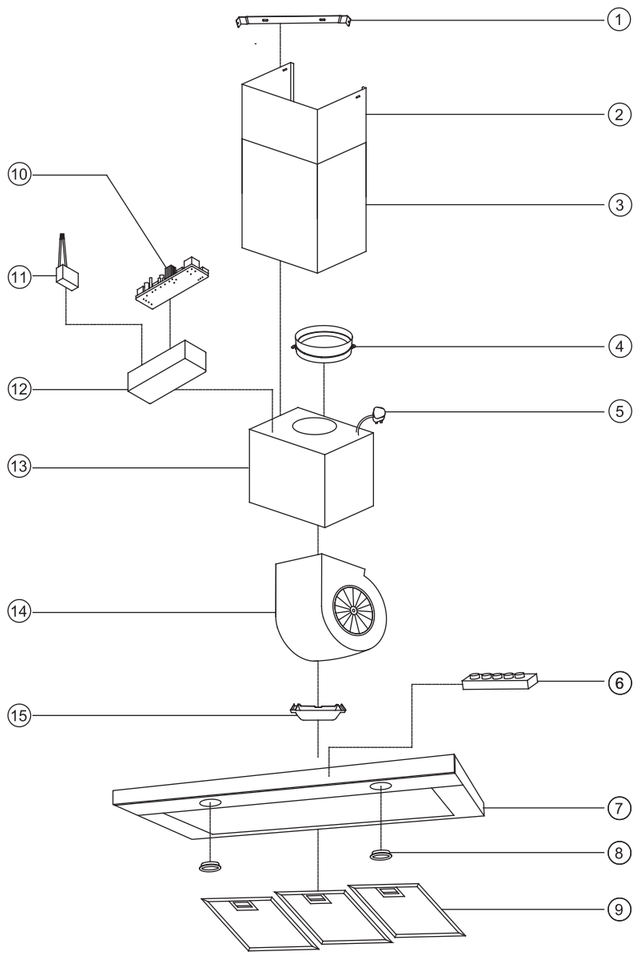

1. Chimney Mounting Bracket
2. Upper Chimney Cover
3. Lower Chimney Cover
4. Tube Joint
5. Power Cord
6. Touch Switch
7. Body
8. LED Light
9. Filter
10. PCB
11. Capacitor
12. Electric Box
13. Motor Case
14. Exhaust Fan
15. Oil Cup

Rasonic 樂信牌

Chimney Range Hood 抽油煙機

3.3 安裝程序圖

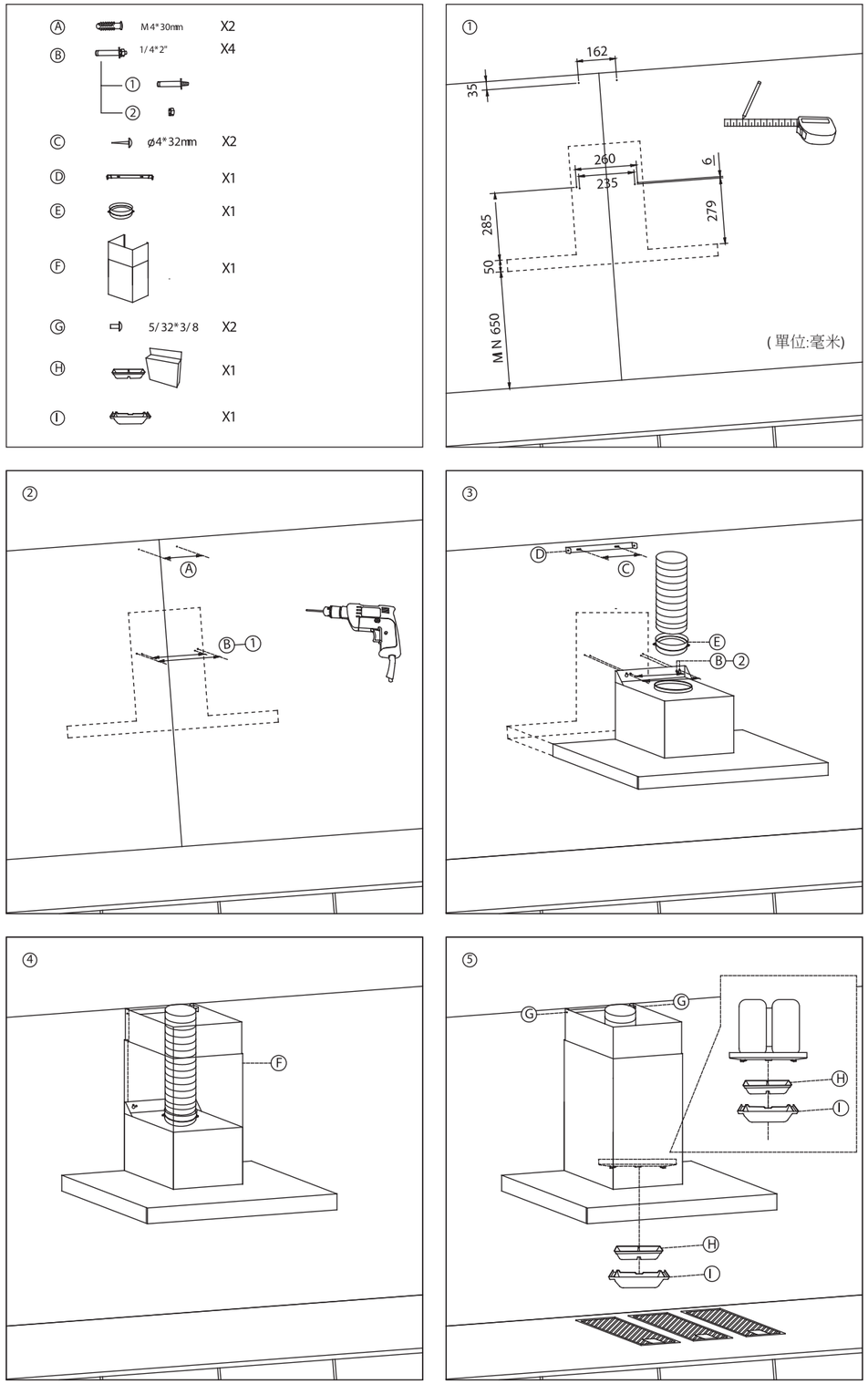

4. 產品操作/保養/清潔方法

4.1 本機之操作：

當欲使用時，可依所需觸按機體前方之開關按鍵。

按鍵說明：

觸控按鍵功能說明				
風速 TURBO	風速高速	風速低速	電燈開啓	風扇開關

風速TURBO功能：
按TURBO鍵時，馬達會以最高速運轉瞬間增強吸力，可應付大火快炒所產生之瞬間大量油煙。

延遲關機功能：
此功能可將廚房剩餘油煙排除。當風扇運轉時按下風扇開關鍵，此時會進入延遲運轉180秒，風扇開關符號會閃爍提醒使用者，延遲運轉完成後即自動關機。延遲運轉過程中若要強制停止運轉，只須再次按下風扇開關鍵即可。

4.2 集油杯之裝拆圖：請確保電源關上，拆下中間的濾網，便可見集油杯。

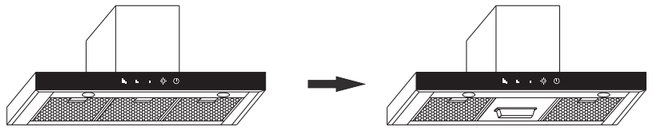

4.3 LED燈膽注意事項：
如燈膽故障請聯絡信興電器服務中心有限公司。

4.4 濾網拆裝及清洗方法：（請依使用頻率約一至三天清洗鋁濾網一次）

a. 確保電源關上。
b. 將濾網卡榫往後推即可將濾網拆下。（如右圖）
裝回時，只須將濾網下緣卡榫置入油機本體缺口，再將卡榫往後推即可裝回。
c. 清洗方法：
(1) 清洗時可用熱水沖洗表面及使用軟布輕拭濾網後，擦乾即可。
(2) 油污份量過多不易清洗時，可將濾網置於滾水鍋內沸騰一分鐘即可將油污去除。
(3) 每餐煮食完畢即沖洗濾網，可常保濾網潔淨與吸力順暢。
(4) 建議因實際使用情況更換濾網新品。

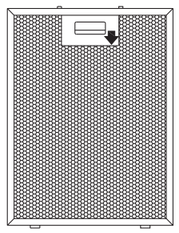

⚠ 注意事項

A. 請經常清洗濾網，可保持排油煙機之最佳排煙效果。
B. 經常清洗濾網可免除濾網內油污份量過多，導致油污經由煮食時遇熱融化滴油之可能。
C. 建議每次煮食完畢，請以中性清潔精沾在柔軟抹布擦拭機身，可保持機身清潔。
D. 嚴禁在抽油煙機下方煮食燒酒雞或鍋內點燃之物品，以免火焰被吸入產生危險及燒毀抽油煙機本體及濾網。

16. This appliance can be used by children aged from 8 years and above and persons with reduced physical, sensory or mental capabilities or lack of experience and knowledge if they have been given supervision or instruction concerning use of the appliance in a safe way and understand the hazards involved. Children shall not play the appliance. Cleaning and user maintenance shall not be made by children without supervision.
17. Keep it out of reach of infants.
18. Do not insert object such as pins or wire into the fliter.
19. Do not touch the appliance, plug or unplug the power plug by wet hand.
20. Do not place the power cord hang over the edge of table, counter-top or contact with the hot surfaces. Do not use the appliance when the power cord is tangled, it may let the power cord be frayed and damaged.
21. Do not disassemble, attempt to repair, or modify the appliance. For repairing, please contact Shun Hing Electric Service Centre Limited.
22. If the provided power cord is damaged, it must be replaced by Shun Hing Electric Service Centre Limited to avoid any hazard.
23. Do not use the appliance for purposes other than ventilation. (If user uses the appliance other than ventilation, it may cause malfunction and hazard.)
24. To prevent hazards, when the appliance or its parts are malfunctioned, do not replace with any parts or accessories which were produced without authorization. (Otherwise, the maintenance guarantee becomes invalid.)
25. In order to comply with safety regulations and to avoid hazards, if the appliance needs to be checked or repaired, please contact Shun Hing Electric Service Centre Limited (hotline at 2406-5666 or refer to the address found in the back page of this manual), and be reminded that the official invoice and guarantee certificate must be presented for checking and repairing service.

Chimney Range Hood 樂信抽油煙機 煙囪式抽油煙機

1. Important Safeguards

When using the appliance, please follow the basic safety precautions as below. Failure or negligence in observing these safety precautions could cause fire, electric shock or personal injury.

1.1 Environment of Operation

1. The appliance is for household (home or indoor) uses only. Do not use it outdoors and any other uses that are not recommended in this manual. If the appliance is used improperly or for commercial or semi-commercial purpose or if it is not used according to the instruction in the user manual, the maintenance guarantee becomes invalid and we refuse any liability for damage caused.

1.2 Precautions

1. Please place the cookware properly before turning on the cooker hob. Do not flame the range hood with the stove directly.
2. There shall be adequate ventilation of the room when the range hood is used at the same time as appliances burning gas or others fuels.
3. Do not flame under the range hood. When frying, take particular care to prevent oil and grease or other flammable seasonings (e.g. brandy) from catching fire.
4. Stop the range hood operation immediately if oil ignites.
5. If the appliance is cracked, stop using immediately, switch off and unplug the appliance or switch off the switch in the fixed wiring to avoid the possibility of electric shock, short circuit and fire. Please contact Shun Hing Electric Service Centre Limited for checking and repairing.
6. Follow the cleaning instruction when cleaning the range hood to avoid hazard.
7. Disconnect the power and unplug the power plug before cleaning .
8. Turn off the power before removing fliter and oil cup.
9. CAUTION: Accessible parts may become hot when used with cooking appliances. Please do not touch.
10. Avoid spraying water or detergent onto the motors and control panel directly.
11. When replacing the lamp, the power connection must be disconnected. If the lamp is hot, please wait for about 20 minutes to let the lamp to cool down before replacement.
12. Never use petrol, benzene, thinner or any other similar chemicals for cleaning the appliance.
13. Do not allow people unaccustomed to handle the appliance from using it without supervision.
14. The appliance is not intended for use by person (including children) with reduced physical, sensory or mental capabilities, or lack of experience and knowledge, unless they have been given supervision or instruction concerning use of the appliance by a person responsible for their safety.
15. Great care is necessary in using the appliance, especially near children. Children should be supervised to ensure that they do not play with the appliance. Also, children without adult supervision should not operate the appliance and keep them away from the appliance.

Rasonic 樂信牌

Chimney Range Hood 樂信抽油煙機

5. 故障排除

使用時，如發現產品操作上有問題，在維修前請先對照下表進行檢查及處理。

狀況	檢查
抽油煙機不運轉	– 是否已觸按面板上的 “開”鍵? – 是否停電? – 電源線插是否鬆脫?
吸力不夠	– 機體與爐面的距離是否太大? – 門窗是否太多,空氣對流太大 ? – 排風管有否過長或彎位太多? – 室外風力是否太强?
抽油煙機有異常聲響或震動	– 過濾網是否安裝妥當? – 過濾網是否積滿油垢?

如以上問題仍未解決，請關上電源開關或獨立開關掣，並聯絡信興電器服務中心有限公司（電話：2406-5666），並確保在檢查或維修時可出示有效的保修證及收據。切勿自行拆卸及修理產品，避免產生觸電危險及對產品造成損害。

Chimney Range Hood 樂信抽油煙機

6. 產品電路圖 RRH-GT50

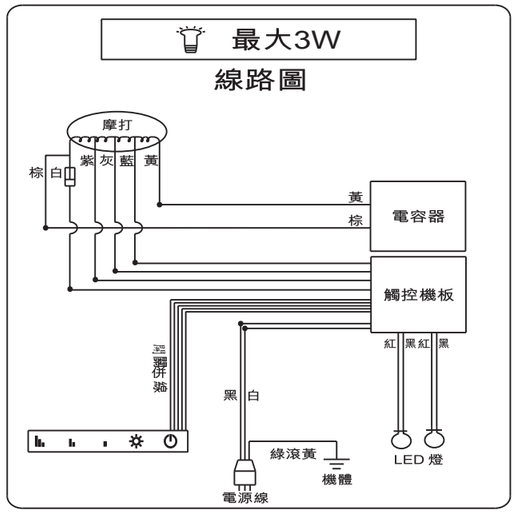

7. 備註

1.本資料上所有內容經過認真核對，如有任何印刷及內容上的誤解，本公司將保留解釋權。
2.本產品若有技術改進，會編進新版說明書中，恕不另行通知；產品外觀、顏色及規格
如有改動，均以實物為準。
3.使用說明書的電子副本可以通過電子郵件發送致客戶。
如有需要，請致電信興電工工程有限公司：28612767。

8. 售後服務

1.由購買日期起之一年保修期內，經信興電器服務中心有限公司之服務人員證實乃在
正常使用之情況下發生者，本公司將提供免費修理及更換零件。經更換之任何損壞零件，
將歸屬本公司。保修範圍不包括修理或更換產品之附件、外接線及機殼等，如有
需要服務時，用戶須另付費用。
2.用戶請於維修時出示購買收據 / 換購收據及保修證，如有任何疑問，請致電
信興電器服務中心有限公司熱線查詢：2406 5666。
3.如在保修證內所列之電器：
1) 曾經被非本公司技術人員明顯地或非明顯地進行改裝、更改或修理；或
2) 曾經被錯誤或不適當或疏忽使用、或因液體浸蝕、水濺、不正常供電、天災、
意外或外來因素造成損壞；或
3) 並非安裝在陸上固定地點；或
4) 不當安裝位置影響正常操作；或
5) 非工商業用型號產品，被用作工商業用途；或
6) 用戶搬遷地址或更換物主而未能及時通知信興電器服務中心有限公司者，
本保修證將自動失效。

Rasonic 樂信牌

Thank you for purchasing Rasonic Range Hood. Please read this manual carefully before using and well keep this manual for your future reference.

Attention:
The installation of height is measured vertically from the bottom of hood to the top of stove, the recommended height is 65-70 cm. The hood shall be kept in horizontal position to prevent grease from pouring out of oil container.

Table of Contents

1. Important Safeguards
2. Product Configuration and Specification
3. Installation of Range Hood
4. Operation of Range Hood / Maintenance and Cleaning Methods
5. Troubleshooting and Treatment
6. Product Circuit Diagram
7. Remarks

Chimney Range Hood 抽油煙機 使用說明書